Disposable shower kits

Ref. AT808Y.25P

Flexible shower hose L. 0.85m with a yellow union



DESCRIPTION

Disposable shower kits

Ref. AT808Y.25P

Disposable shower kit.
- 25 white PVC flexible shower hoses L. 0.85m with yellow ABS conical unions,
- 25 white monojet shower heads, Ø 70mm: rain effect.

Ideal for healthcare facilities:
- Disposable shower kit: enables regular changing.
- Flexible hose has smooth interior/exterior: easy to maintain with fewer bacterial niches.
- Coloured conical unions: provide clear visual indication and help to ensure correct shower kit replacement.

Packs of 25.

ADVANTAGES

- Shower kit is easy to replace
- Can be identified easily on sight
- Suitable for any type of shower

TECHNICAL CHARACTERISTICS

Disposable shower kits - Ref. AT808Y.25P

Length	L. 0.85m
Finish	PVC, ABS
Norms	ACS WRAS

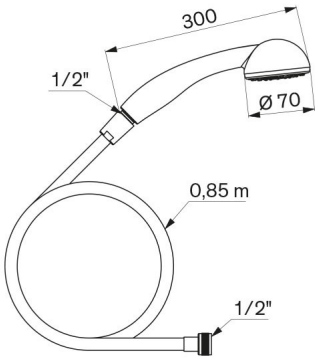

© AQUATOOLS